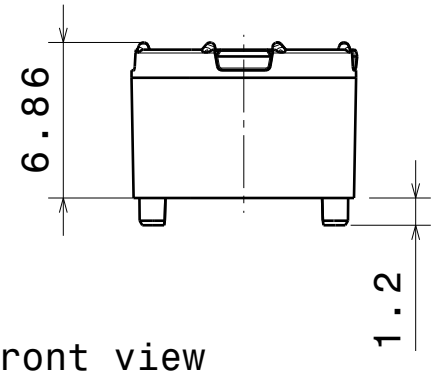

Front view

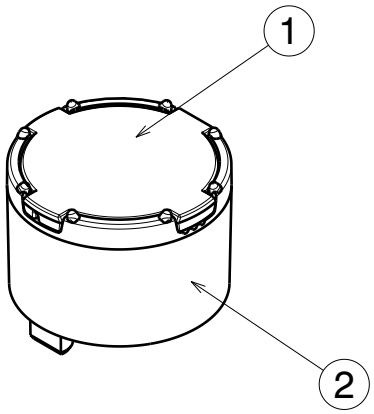

Isometric view

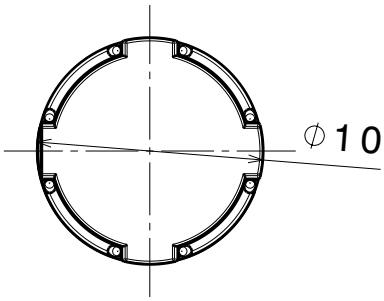

Top view

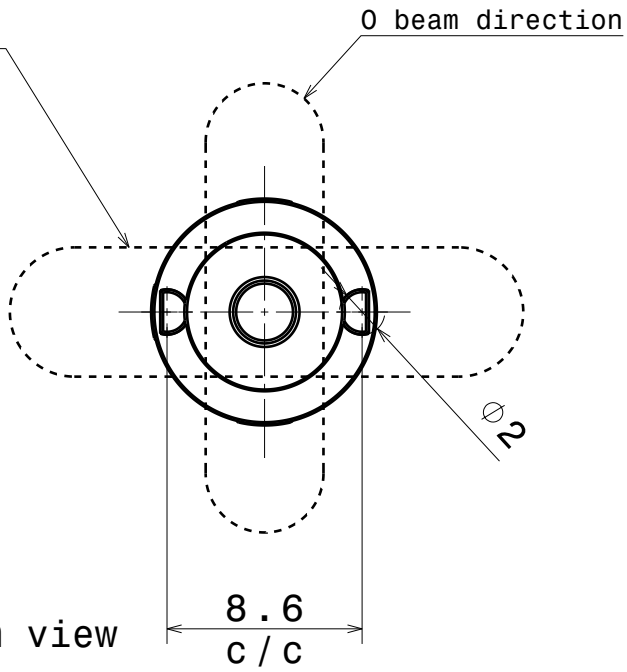

Bottom view

INDEX	DESCRIPTION	MATERIAL	COLOUR
1	Lens	PMMA	clear
2	Holder	PC	black

Tolerances if not otherwise shown
According to DIN ISO 2768-1
Linear measures:
Up to 30mm class M, otherwise class C.
According to DIN ISO 2768-2
Form and position: class L

Ledil Oy
Salorankatu 10
FIN 24240 SALO
Finland

THIRD ANGLE PROJECTION:

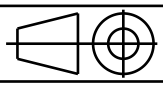

DRAWING TITLE

LISA2-0/0-90 Datasheet

SIZE A4

PART NUMBER -

SCALE 3:1 | WEIGHT - | SHEET 1/1